Theia®
TECHNOLOGIES

TL410 family
4K Resolution Day/Night lenses
up to 1/1.7” sensors

- ✓ **Ultra high resolution for 4K cameras**, up to 12.4 megapixel
- ✓ Available in DC **auto-iris**, **P-iris,** and **manual iris** versions
- ✓ **Fully motorized versions**, or combinations with zoom, focus, iris, IR cut, limit switch; non-motorized versions also available
- ✓ IR corrected for true **Day/Night** cameras
- ✓ **Compact design** to fit into domes as small as 4” mini-dome size
- ✓ **CS-mount** and smooth **D25 board mount** options, as well as **C-mount**
- ✓ Used for sensor sizes 1/2.5”, 1/2.3”,1/ 2” 1/1.8”, and **up to 1/1.7”** (Sony IMX178, Sony IMX226 for example)

SL/TL410 lens family specifications

Focal length	4-10mm
Image circle	Ø9.4mm
Resolution	12.4 megapixel
F/#	F/1.4 @ 4mm – F/2.4 @ 10mm to close
Focus Range	0.5m to infinity
IR Correction	Day/Night
Lens length	< 64mm TTL
Back focal length	BFL 8.4mm (in air)
CRA	< 7°
Distortion	< 61% at 4mm, < 8% at 10mm
Relative illumination	>45%
Lens transmission	>80%
Weight	69-78g (depending on version)
Operating temperature	-20C to 60C (<70% humidity, non-condensing)
Storage temperature	-30C to 70C (<90% humidity, non-condensing)

Field of view for sensor sizes

Sensor size	1/1.7”	1/1.8”	1/1.8” 4K*	1/2”	1/2.3”	1/2.5”
Horizontal	112° - 44°	110° - 43°	110° - 43°	93° - 37°	90° - 36°	83° - 33°
Vertical	81° - 33°	71° - 29°	52° - 21°	68° - 28°	67° - 27°	60° - 25°
Diagonal	149° - 55°	139° - 52°	126° - 48°	120° - 46°	117° - 45°	106° - 42°

*4K format = 4000 x 2000 pixels

www.TheiaTech.com

Lens designation

xx410x xx -xx

CS: CS mount
25: smooth Ø25mm mount

TL: motorized
SL: non-motorized
ML: C mount

A: autoiris
P: P-iris
M: manual iris

R3: motorized zoom, focus, iris
R4: motorized zoom, focus, iris, IRC
R5: motorized zoom, focus, iris, with limit switch for zoom, focus limits
R6: motorized zoom, focus, iris, IRC, with limit switch for zoom, focus limits

Production versions: (call for other versions)
SL410M (manual lens, manual iris, CS mount)
SL410A (manual lens, DC autoiris, CS mount)
SL410P (manual lens, P-iris, CS mount)
ML410M (manual lens, manual iris, C mount)
TL410A R6-CS (fully motorized, DC autoiris lens)
TL410P R6-CS (fully motorized, P-iris lens)
TL410P R6-25 (fully motorized, P-iris, D25 mount)

Other versions are available by special request and may be added to regular production

Representative drawings

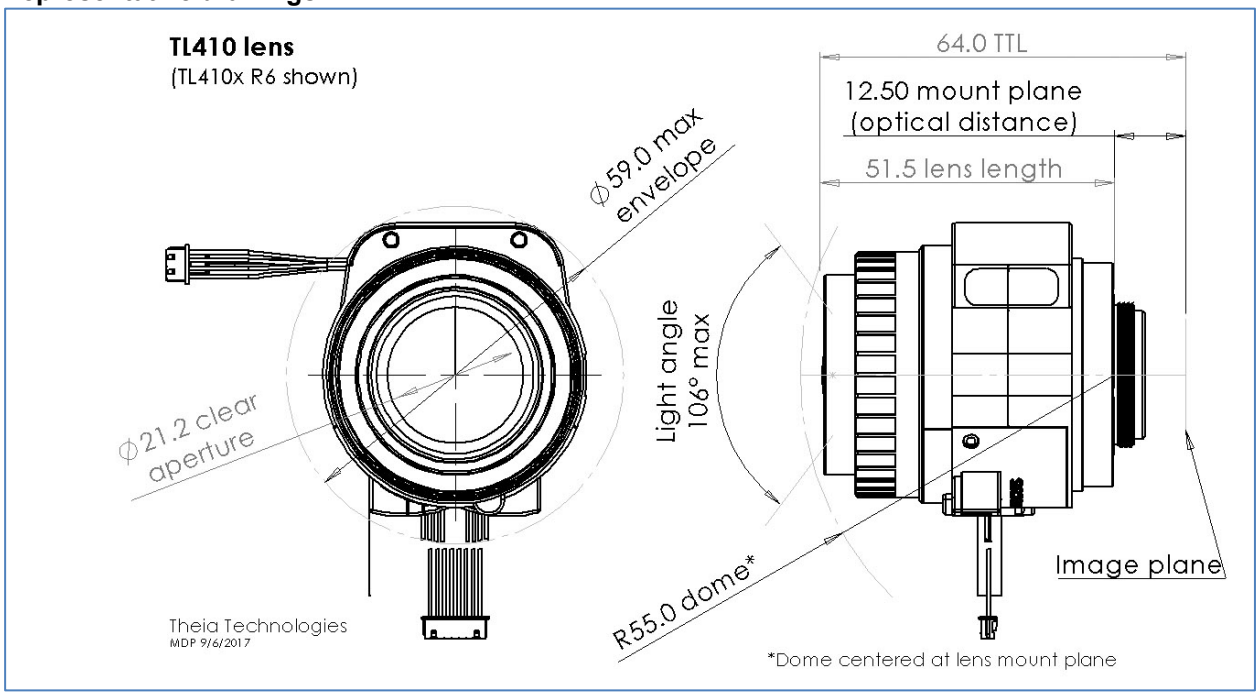

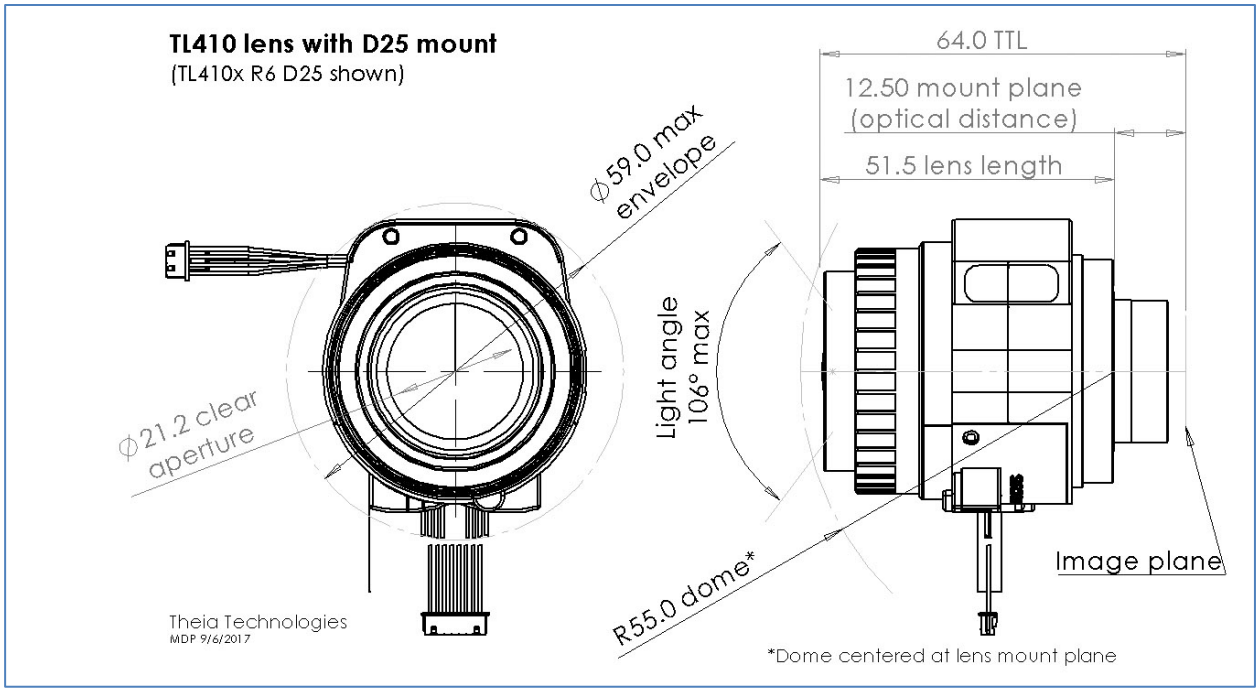
TL410 lens with D25 mount
(TL410x R6 D25 shown)
64.0 TTL
12.50 mount plane
(optical distance)
51.5 lens length
Ø59.0 max
envelope
Light angle
106° max
Ø21.2 clear
aperture
R55.0 dome*
Image plane
Theia Technologies
MDP 9/6/2017
*Dome centered at lens mount plane

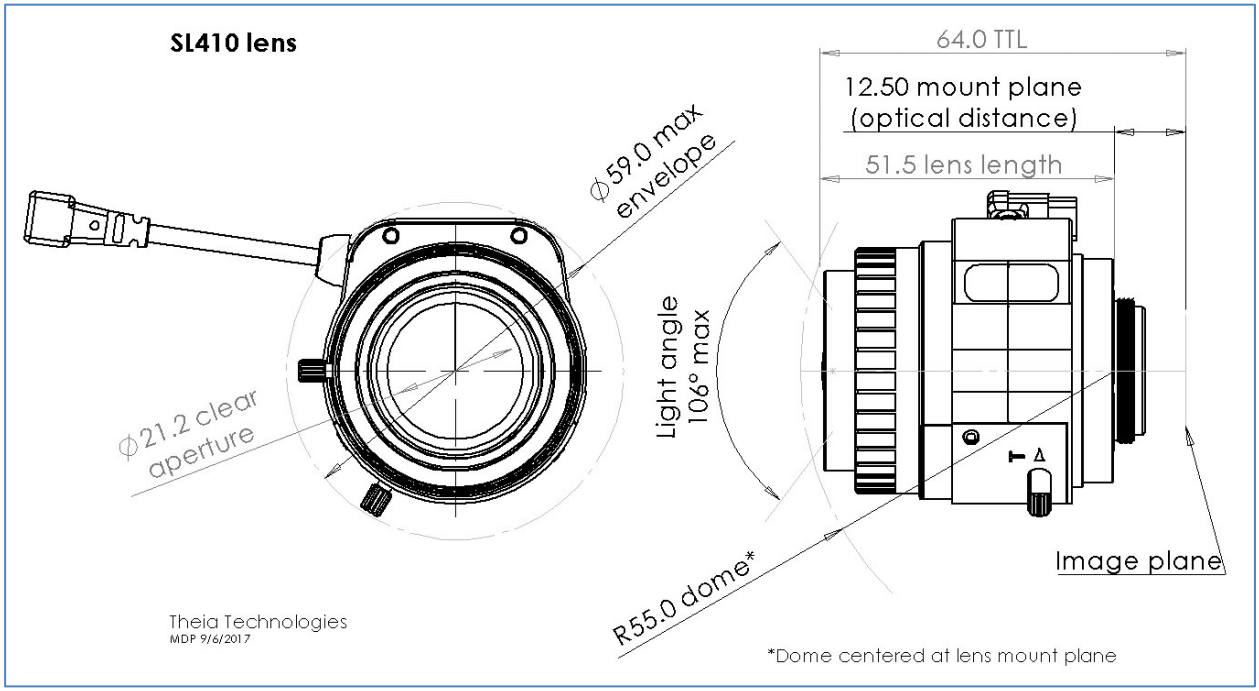
SL410 lens
64.0 TTL
12.50 mount plane
(optical distance)
51.5 lens length
Ø59.0 max
envelope
Light angle
106° max
Ø21.2 clear
aperture
R55.0 dome*
Image plane
Theia Technologies
MDP 9/6/2017
*Dome centered at lens mount plane

Pictures of some of the versions

TL410x R6

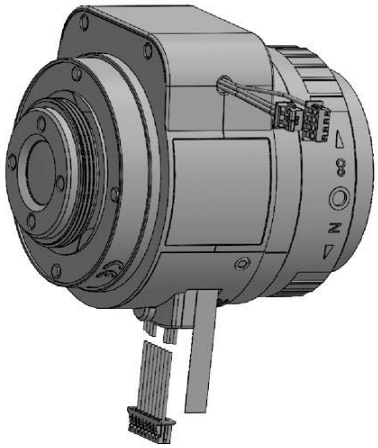

TL410x R6 D25

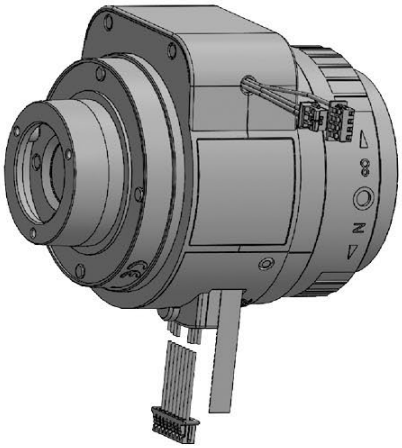

SL410x

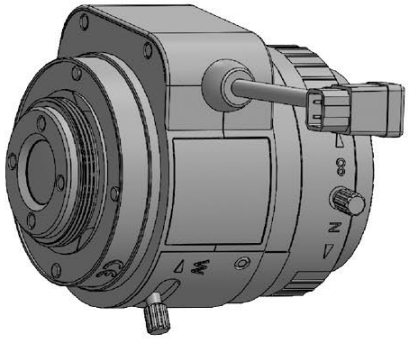

SL410M

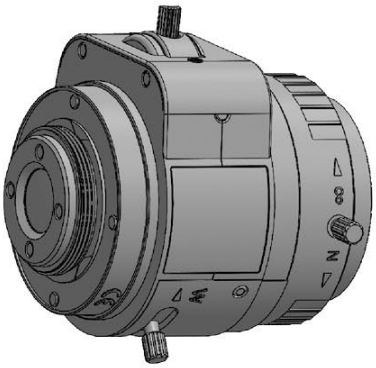

ML410M

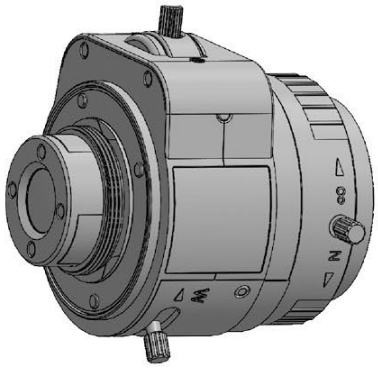

Zoom/Focus motor specifications

Applicable models: TL410Axx, TL410Pxx

Drive	Stepper motor 2 phase bipolar drive
Operation voltage	3.3V (operating range 2.6~4.8V)
Maximum continuous operation time (seconds) for operation voltage and ambient temperature*	
Coil resistance	28.5Ω (±7%)
Gear ratio	1:2025
Zoom number of steps	4073 steps between hard stops
Zoom speed range	600pps to 1000pps
Zoom cam rotation	85°
Focus number of steps	9354 steps between hard stops
Focus speed range	600pps to 1000pps
Focus cam rotation	196°
Focus/zoom connectors	Housing: Molex 51021-0800 Terminal: Molex 50058-8000
Cable length	150mm

	3.3V	4.0V	4.8V
20C	200s	90s	50s
40C	100s	60s	30s
60C	40s	30s	15s

Zoom: Wide -> Tele
Focus: Near -> ∞

Step	A+	A-	B+	B-
0	H	L	H	L
1	L	H	H	L
2	L	H	L	H
3	H	L	L	H

Pin	Color	Function	Motor
1	Brown	A+	Focus
2	Red	A-	Focus
3	Yellow	B+	Focus
4	Gray/Orange	B-	Focus
5	Brown	A+	Zoom
6	Red	A-	Zoom
7	Gray/Orange	B+	Zoom
8	Yellow	B-	Zoom

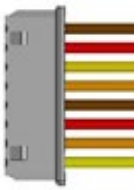

*Do not let motor temperature exceed 92°C.

Theia's motor temperature calculator can be used to estimate the focus and zoom motor temperatures after a set number of run/ cool down cycles. This can be downloaded from Theia's website (see the QR code below).

Motors require 5 minutes to cool down completely to ambient temperature.

The example below shows 60C ambient and 4V motor driven at 1000pps. Motors reach maximum temperature in <30 seconds and should be allowed to cool down. If the motor is run again before complete cool down it will reach maximum temperature in <30 seconds.

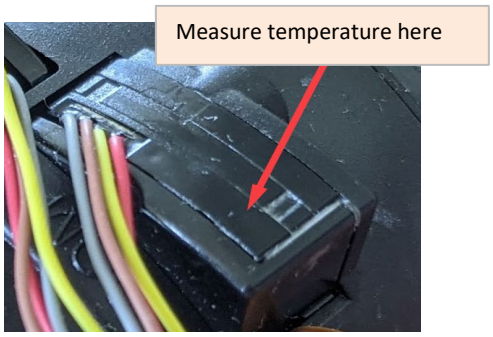

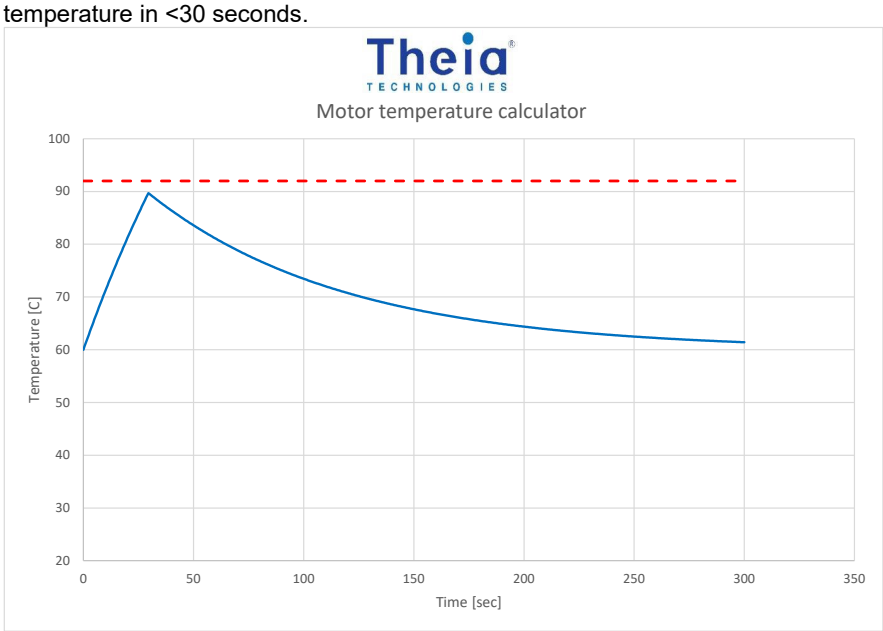

Motor temperature calculator
bit.ly/motorTemp

Zoom/Focus motor step map (at infinite focus position). PI positions only available with -R5 and -R6 lenses.

Zoom motor		*Focus motor*	
Note	*Step*	*Note*	*Step*
Hard stop (wide)	4073	Hard stop (far)	9353
Wide design position	4073	PI position	8952
PI position	154		
Tele design position	0		
Hard stop (tele)	0	Hard stop (near)	0

Zoom/Focus synchronizing map (observe min/max motor speeds)

Focal length	***Zoom motor note***	***Zoom motor step number***	***Focus ring note***	***Focus motor step number***
[mm]		*[#]*		*[#]*
4.15	Wide end	4073		288
4.96		3501		3149
5.77		2929		4892
6.58		2356		6125
7.39		1784		7687
8.19		1212		8599
9.00		640		8960
9.70		139		8931
9.90	Tele end	0		8871

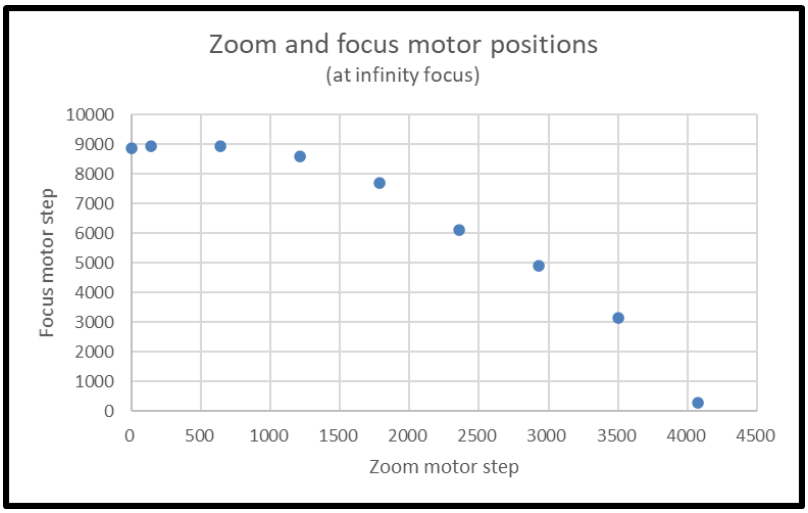

Notes:

1. Zoom and focus **motor positions may be affected** by backlash and lost steps during movement. Zoom motor lost steps are tested to <45 over the full 3934 step range. Focus motor lost steps are tested to <30 over the full 8464 step range.

2. These motorized lenses are intended for integration into cameras and require motor drivers and controllers. Typically, Theia works with the camera manufacturer to ensure that the camera motor controller matches the lens. It is possible to supply your own motor controller, but Theia cannot guarantee that your motor controller will not damage the lens. Theia does not offer any warranty on the suitability of these motorized lenses for any particular camera. These motorized lenses are **not intended for continuous use** of the motors as in PTZ applications. Theia offers motor control boards that are suitable to control motorized lenses with P-iris.

DC auto-iris motor specifications

Applicable models: SL410A, TL410Axx

Drive	DC
Operation voltage	3V (2.5~5.0V)
Max current consumption	22mA
Drive coil resistance	190Ω
Damper coil resistance	855Ω

Connector type 1 (Molex)
Applicable models **TL410A R4, TL410A R6**

Connector type	Housing: Molex 51021-0400 Terminal: Molex 50058-8000
Cable length	150mm

Pin	Color	Function
1	Brown	Control -
2	Red	Control +
3	Yellow	Drive +
4	Orange	Drive -

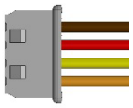

Connector type 2 (CCTV)
Applicable models **SL410A, TL410A R3, TL410A R5**

Connector type	Housing: EYC 221
Cable length	300mm

Pin	Function
1	Control -
2	Control +
3	Drive +
4	Drive -

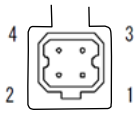

P-iris motor specifications

Applicable models: SL410P, TL410Pxx

Drive	Stepper motor 2 phase bipolar drive
Operating voltage	4V (+/-1)
Number of steps	75
Basic step angle	18°
Maximum response freq.	200 pps
Coil resistance	30Ω (each phase)

P-iris: open->close				
Step	A+	A-	B+	B-
0	H	L	H	L
1	L	H	H	L
2	L	H	L	H
3	H	L	L	H

Connector type 1 (Molex)
Applicable models **TL410P R4, TL410P R6**

Connector type	Housing: Molex 51021-0400 Terminal: Molex 50058-8000
Cable length	150mm

Pin	Color	Function
1	Brown	B+
2	Red	B-
3	Yellow	A+
4	Orange	A-

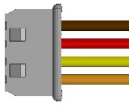

Connector type 2 (CCTV)
Applicable models **SL410P, TL410P R3, TL410P R5**

Connector type	Housing: EYC 221
Cable length	300mm

Pin	Function
1	B+
2	A+
3	A-
4	B-

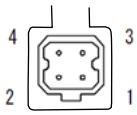

P-iris motor map

Step	Aperture Size [mm2]	F/#
1	65.0	1.43 (open)
5	65.0	1.43 (open)
10	65.0	1.43 (open)
15	65.0	1.43 (open)
19	65.0	1.43 (open)
20	63.4	1.50
25	54.0	1.63
30	44.9	1.78
35	36.0	1.98

Step	Aperture Size [mm2]	F/#
40	27.7	2.26
45	20.0	2.65
50	13.2	3.26
55	7.5	4.34
60	3.1	6.71
65	0.8	12.86
70	0.1	46.06
72	0.0	Closed
75	0.0	Closed

IR Cut specifications

Applicable models: TL410A R4, TL410P R4, TL410A R6, TL410P R6

Electrical specifications	
Drive	DC
Operating voltage	4V
Drive coil resistance	130Ω
Connector type	Housing: Molex 51021-0200 Terminal: Molex 50058-8000
Cable length	150mm
Optical specifications for IR filter (Day)	
Cut-on wavelength	405nm ±10nm
Visible transmission	430-610nm
Cut-off wavelength	650nm ±10nm
IR transmission	<5% max 700-1000nm <10% ave 1000-1100nm
Optical specifications for clear filter (Night)	
Visible transmission	400-1050nm

Mode	Pin 1	Pin 2
Day (IR filter)	L	H
Night (clear filter)	H	L
Wire color	Red	Black

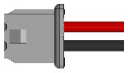

Zoom/Focus limit switch

Applicable models: TL410A R5, TL410P R5, TL410A R6, TL410P R6

Type	Photo interrupter phototransistor
Part model	Sharp GP1S396HCPSF
Operating voltage	3.3V
Output level	>2.2V HIGH <0.6V LOW
Connector type	FPC cable
Board-side mating connector type (not supplied)	Molex 52746-0671 Molex 52745-0697 Molex 52559-0652
Cable length	150mm

Pin*	Function	Motor
1	Emitter	Focus
2	Anode/Collector	Focus
3	Cathode	Focus
4	Emitter	Zoom
5	Anode/Collector	Zoom
6	Cathode	Zoom

*cable side pin designation matches Molex 52746-0671 bottom side contacts connector

Recommended circuit for each photo interrupter

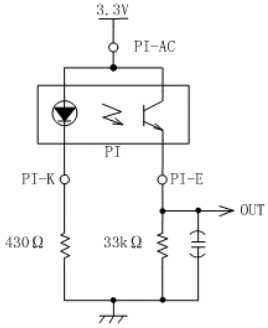

For more information contact
Theia Technologies

info@TheiaTech.com
www.TheiaTech.com
+1-503-570-3296

Revisions

Version	Change	Reason
160104	Changed IR cut pin-out	Changed to match industry standard
	Updated focus/zoom map	Due to changed focus cam design
160108	Added focus photo interrupter trigger point	Missing from spec
160112	Swapped 2 focus motor pins	Motor phases did not match stepper sequence direction
160113	Added motor energizing time maximums	Clarification to prevent focus/zoom motor overheating
	Updated temperature spec	Consistent with motor supplier specification
	Updated weight	Missing from spec
	Updated IR filter transmission specs	
160128	Swapped focus motor pin 3-4 functions	Not updated correctly when motor direction was reversed
161107	Added applicable model numbers to iris section	Available iris connectors was confusing
170109	Changed PI FPC pin-outs	To match bottom side contacts connector; top side contacts connector may be discontinued
170905	Corrected focus ring rotation amount	Older version, pre-focus improvement number
	Updated drawings	Added additional version drawings, corrected 2x 4-pin connectors for zoom/focus.
180117	Corrected FPC pinout	Pinout numbering was reversed
181206	Updated motor speed specs	Focus/zoom recommended speed unspecified, P-iris speed too high
	Added QR code	Directed to TL410 webpage
190730	Typo correction	Lens designation ended midsentence
190924	Zoom/Focus motor map	Changed map and tables to be more clear
200304	Added page number and rev	Revision control
	Added Z/F motor step note	Motor position accuracy not previously specified
	Updated motor speed spec	Focus/zoom recommended speed too high, adjusted to tested range
200327	Added motor cool down graph	New information
	Highlighted model numbers	Clarify which specification sections apply to which lens family members
201013	Changed focus/zoom tracking curve tables and chart	Inconsistent sign/motor direction values between tables and charts
210407	Changed motor run time limits	Motor temperature testing and modeling
210429	Updated lens picture	Prototype lens was shown
	Changed file name	Website SEO optimization
220223	Changed naming convention key	Error
250910	Updated Z/F Motor Step Map	Updated PI position calculations